REVISIONS				
ZONE	REV	DESCRIPTION	DATE	APPROVED

VIEW FRONT

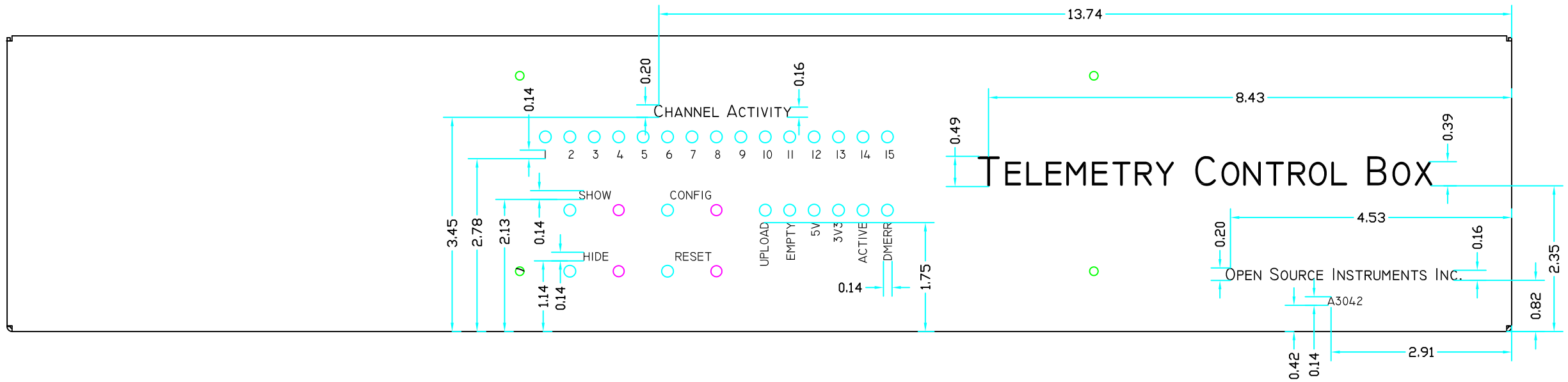

VIEW BACK

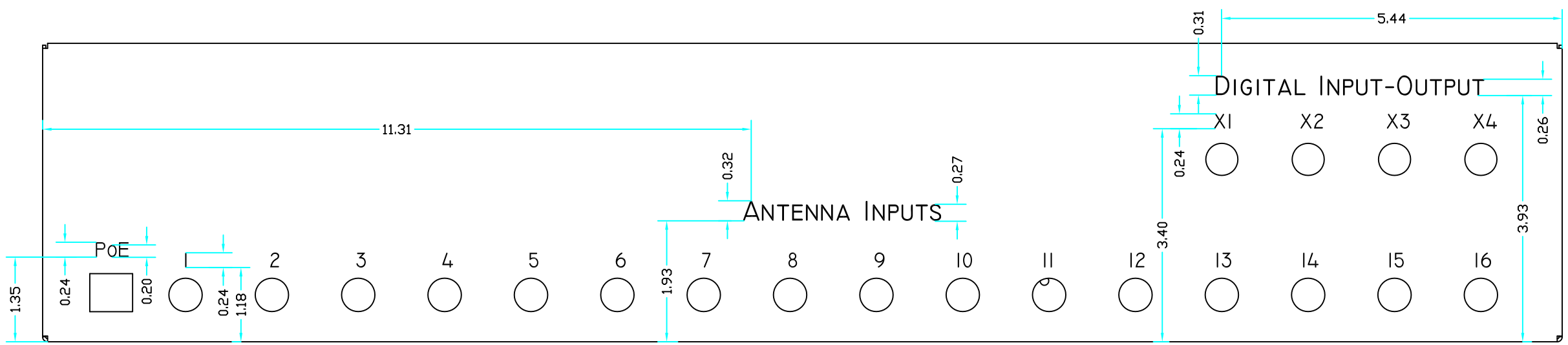

SILK SCREEN AS SHOWN
TEXT HEIGHT AS SHOWN
TEXT FONT TECHNIC, STYLE REGULAR

VIEW FRONT

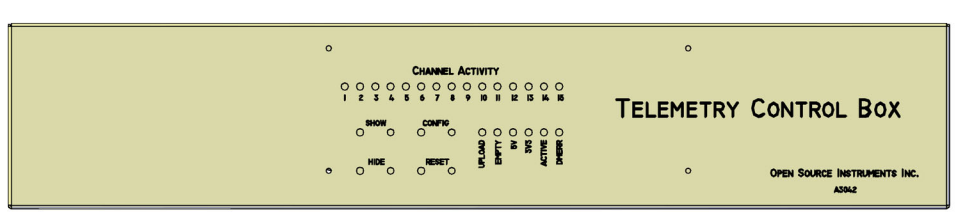

VIEW BACK

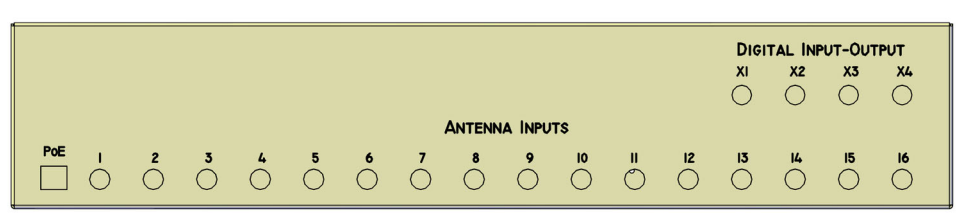

FIND/REF.#	QTY.	U.M.	PART NAME	MATERIAL	PART DESCRIPTION	REF. SHEET/DWG.

PARTS LIST

UNLESS OTHERWISE SPECIFIED

1. DIMENSIONS ARE IN INCHES.
2. MACHINE SURFACES TO BE FLAT, SQUARE, PARALLEL & CONCENTRIC WITHIN .001 FOR 5 INCHES OR .001 TIR AS APPLICABLE.
3. MARK ALL DETAILS (EXEMPT COMMERCIAL PARTS) WITH DWG. & ITEM NUMBER.
4. BREAK ALL SHARP CORNERS .01 x 45° CHAMFER.
5. FILLETS SHOWN SHARP = .04 RAD.
6. TAPPED HOLES: UNIFIED CLASS 2B THREAD., MIN DEPTH 1.5 x DIA.
7. C'SINK BORED & REAMED HOLES 1/16 x 45°.
8. CENTERS PERMISSIBLE.
9. DO NOT SCALE DRAWING.
10. ALL WELDING TO CONFORM TO LATEST A.W.S. STANDARDS

PERMISSIBLE VARIATION IN INCH DIMENSIONS WITHOUT TOLERANCES

FABRICATION TOLERANCES		MACHINING TOLERANCES			
BELOW 12	±0.10	DECIMAL PLACES	X & X.X	X.XX	X.XXX
12 TO 60	±0.13	BELOW 18	±0.015	±0.010	±0.005
60 TO 180	±0.20	18 TO 48	±0.030	±0.020	±0.010
OVER 180	±0.30	OVER 48	±0.045	±0.030	±0.015
ANGLE TOLERANCE ±0.5°		ANGLE TOLERANCE ±0.1°			

SURFACE TEXTURE 125

TOLERANCES ARE NOT ACCUMULATIVE

NEXT ASSY	QTY	DRAWING INFORMATION	NAME	DATE
		DRAWN	AD	08.16.22
		CHECKED	KH	
		APPROVED	KH	

OSI

Open Source Instruments Inc.

TITLE
TELEMETRY CONTROL BOX
ENCLOSURE BASE
SILKSCREEN

SIZE	SCALE
D	1:8

PROJECT NUMBER 109

DRAWING NUMBER 109.00.01.00_SLK

SHEET 1 OF 1

REVISION B